oventrop

Innovation + Quality

Valves, controls + systems

Thermostatic valves “Series AV9” for manual hydronic balancing

Product range

for an improved energy efficiency …

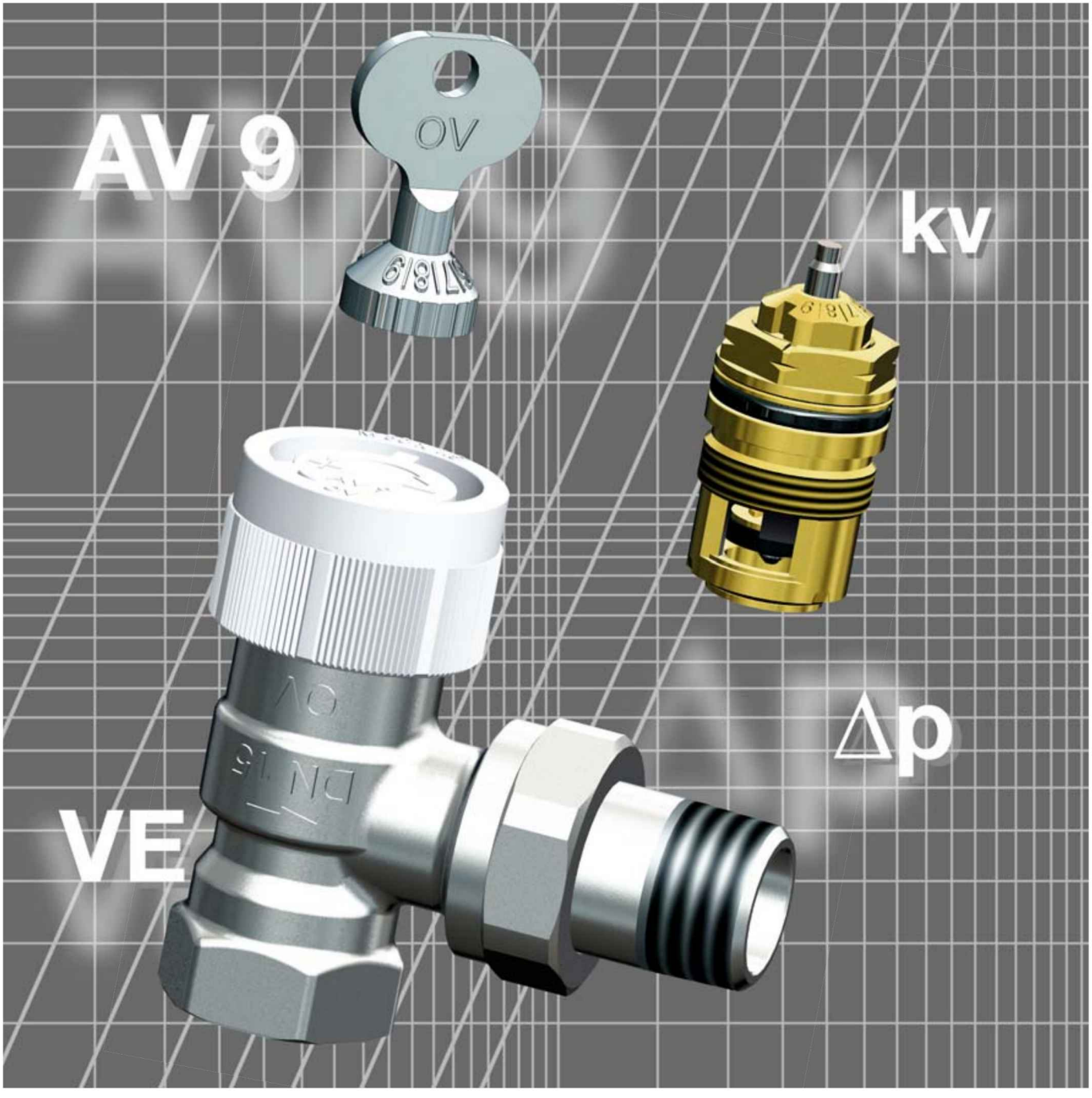

Thermostatic radiator valves “Series AV9” with infinitely adjustable presetting for manual hydronic balancing

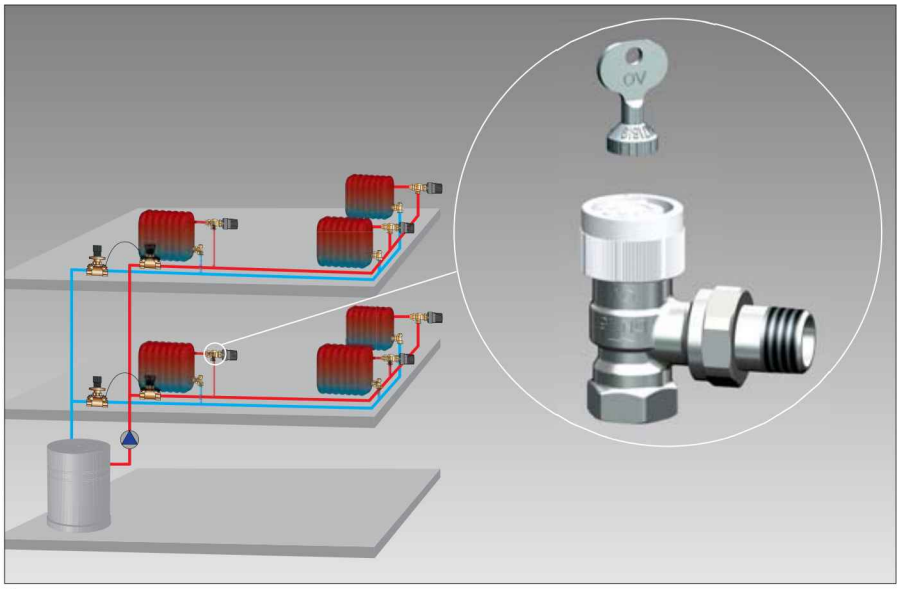

1

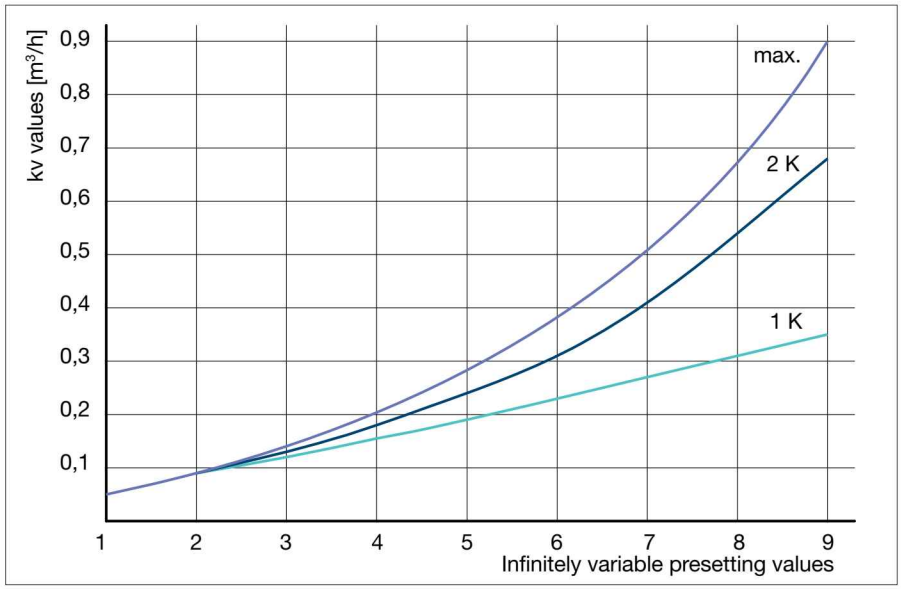

2

Hydronic balancing is paramount for the efficient operation of a heating system. To achieve this, the correct volume flow has to be supplied to the terminal unit (e.g. radiators). The new thermostatic radiator valves of the “Series AV9” feature a valve insert with infinitely adjustable presetting allowing an exact adaptation of the volume flows to the required heat load. The valves of the “Series AV9” are used in two pipe heating systems. The valve insert can be replaced by using the special tool “Demo-Bloc”.

Advantages:

- thermostatic valve with simple presetting (quick setting)
- fine graduated setting scale
- large infinitely variable presetting range
- 17 succeeding presetting values
- presetting by use of a presetting key or a spanner (size 13)
- presetting values visible from outside
- the valve insert which is available separately, fits all “standard” Oventrop valve bodies M 30 x 1.5 manufactured since 1999 (exceptions: “Series M”, “Series AZH” and three-way valves)
- ideal for upgrading and refurbishment
- valve insert replaceable by using the special tool “Demo-Bloc” without draining the system
- thermostatic valve silent in operation

1 Hydronic balancing by using the thermostatic radiator valve “Series AV9”

2 Volume flow chart (kv values at different presetting values and P-deviation)

3 Display of setting scale

4 “Demo-bloc” for replacing the valve inserts without draining the system

3

4

Further information can be found in the catalogue “Products” and on the internet under product range 1.

OVENTROP GmbH & Co. KG
Paul-Oventrop-Straße 1
D-59939 Olsberg
Phone +49 (0) 2962 82-0
Fax +49 (0) 2962 82-450
E-Mail mail@oventrop.de
Internet www.oventrop.de

Printed on paper free from chlorine bleaching.

Product range 1
PR 317-0/20/3.2014/MW